DISC | Industrial Pendant Light



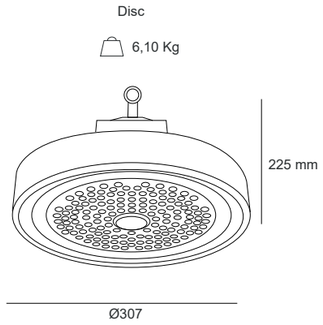

DISC | Industrial pendant Light

Sorgente *Light source*	Watt LED*	Lumen LED	Lumen OUT**	Classe Energetica *Energy rating****	Emissione *Emission*	Alimentazione *Power supply*	K	Colore *Colour*
LED	80W	14620	11081	C	DIFFUSING AVERAGE	ON-OFF DALI	3000K 4000K 6000K	Black
LED	117W	21411	16085	C				
LED	145W	26535	19901	C				
LED	176W	32208	24156	C				

Standby power: 0 | Networked standby power: 0 | Electrical input: 230 Vac 50Hz
*LED power **Total luminous flux output from the luminaire @Tamb 25°C - 4000K ***This product contains a light source with an Energy Efficiency Class of C. Please note an 8% reduction in luminous flux output for a 3000K LED source, and a 10% reduction for an LED source with CRI>90.

Accessory Type	Description
	*2 m suspension cable with hook and fastener (2 pieces required per lamp)*

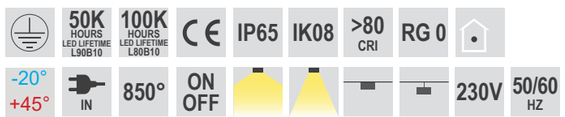

On request:

DALI

APPLICATIONS

- Indoor lighting fixture for production areas, industrial, commercial, and exhibition spaces.
- Certified for use in temperatures ranging from -20°C to +45°C.
- For specific applications, please consult our technical departments.

MECHANICS

- Anodized aluminum housing for the power supply unit.
- Powder-coated finish, providing high resistance to atmospheric agents and UV rays.
- Brightened aluminum reflector, ensuring high luminous efficiency and resistance to chemical agents.
- LED module specifically designed for maximum performance and efficiency.
- Ultra-clear polycarbonate optic, resistant to thermal shock and impact.
- All fasteners are made of stainless steel with a high molybdenum content (2.5–3%).
- Annealed silicone gaskets.
- Includes a plastic cable gland and an output cable (0.5–1m in length).
- IK08 impact protection rating.
- Equipped with a quick-connect fitting for mains connection.
- IP65 protection rating – dust-tight and protected against water jets.
- Insulation Class I.

POWER SUPPLY

- Electronic power supply integrated into the luminaire body.
- Available in a standard (ON-OFF) version; DALI version available upon request.
- Power supply: 220–240 VAC, 50/60 Hz.
- 3/5-pole terminal block.

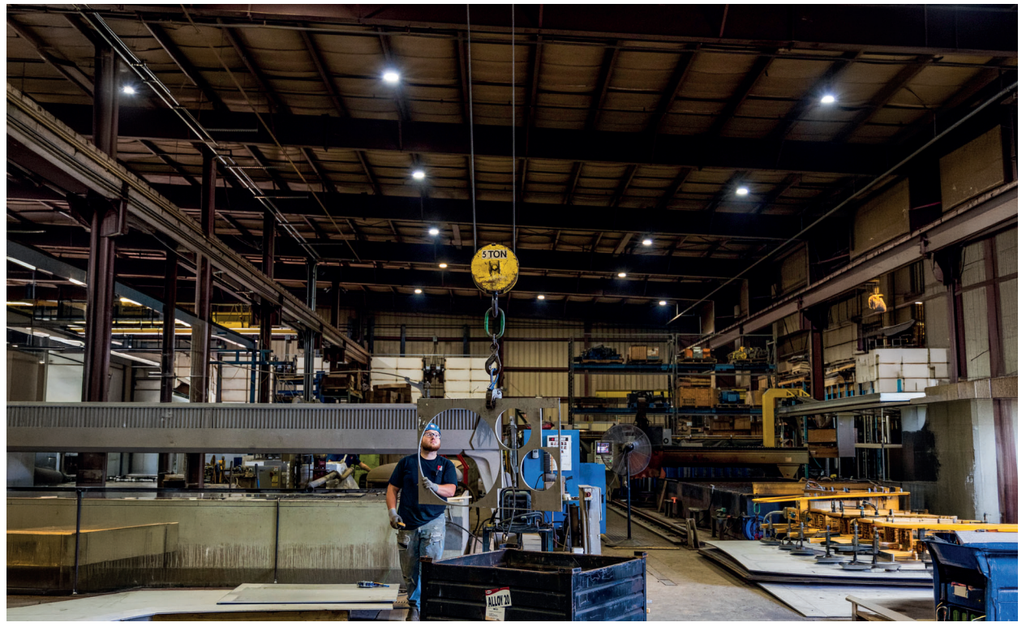

LED light source replaceable only by a qualified technician.

Power supply unit to be replaced only by a qualified technician.

Request the replacement manual from our technical departments

www.xlitesrl.it

For information regarding the minimum/maximum number of lighting fixtures that can be installed on a single switch—where not explicitly stated in our installation manuals—please contact our technical departments. For proper installation of the unit, please refer to the user manual.
For updated technical data or further technical information, please visit our website (www.xlitesrl.it).